OFFICIAL PROOF

20FT Inflatable Arch

FRONT + BACK

Quantity:

Order #:

Date:

PMS:

- [ ] Example
- [ ] Example
- [ ] Example

50% SCALE

Safety Line

Velcro Removable Banners

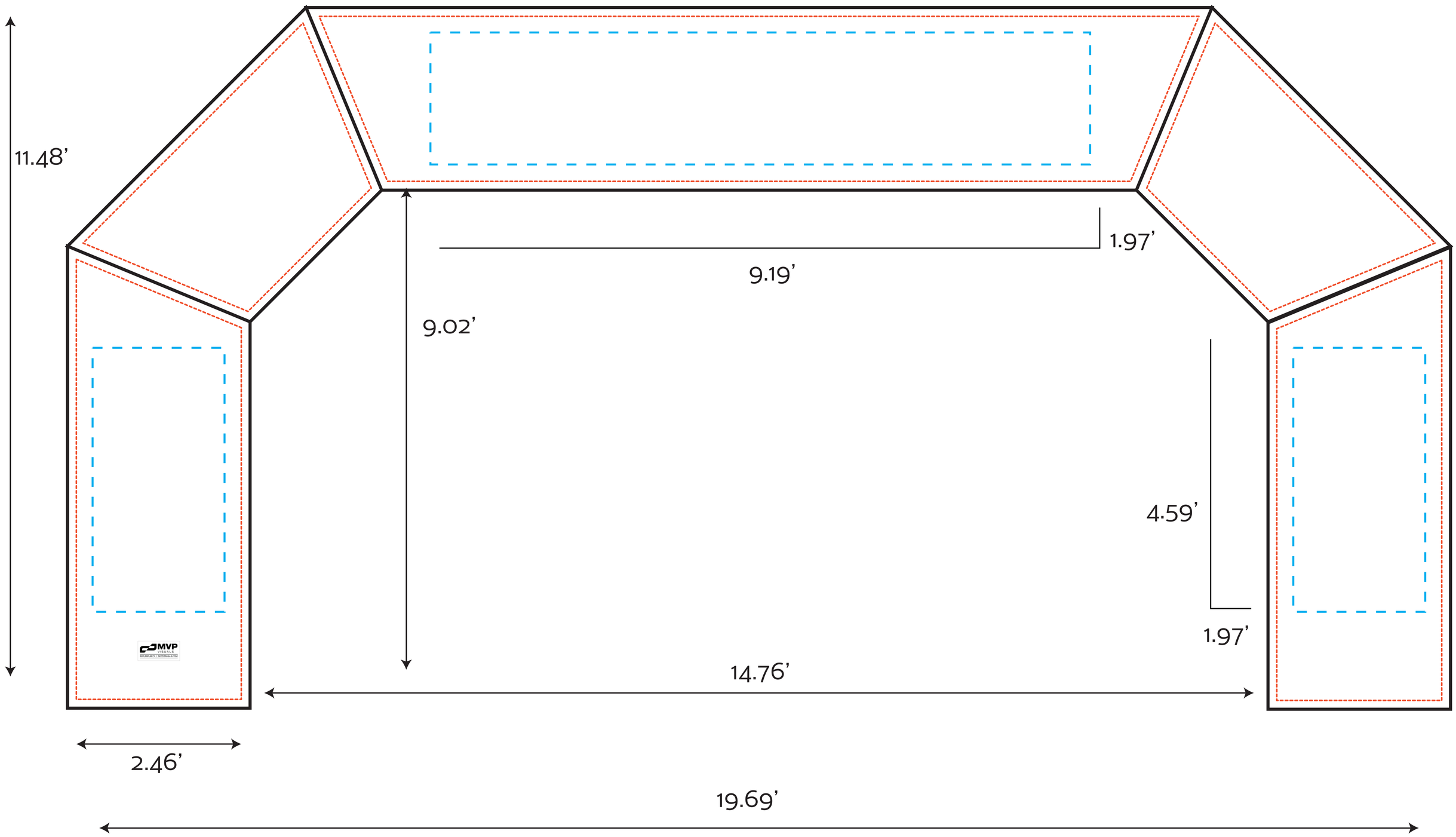

Please note: Your proof and (1) revision are offered at no cost. Edits cannot be made once the proof is approved. This product is being printed digitally in 4 color process (CMYK). PMS numbers are used as a reference point; colors will be matched as close as the 4 color process can achieve. As a result, the finished product may not look like the colors displayed on your computer monitor.
Please reference a PMS book or a physical swatch of the fabric if an exact color is critical. MVP Visuals cannot accept returns for color discrepancies if PMS numbers are not labeled.

CUSTOM ADD-ONS

Feather Flags

Inflatable Football Tunnel

Custom Tents

Spandex Table Covers

Roll Up Banners

mvpvisuals.com | 800-980-6871 | hello@mvpvisuals.com

See Our Products in Action >