OFFICIAL PRODUCTION PROOF

15FT Inflatable Floating Arch
FRONT + BACK

Quantity:
Order #:
Date:

PMS:
- Example
- Example
- Example

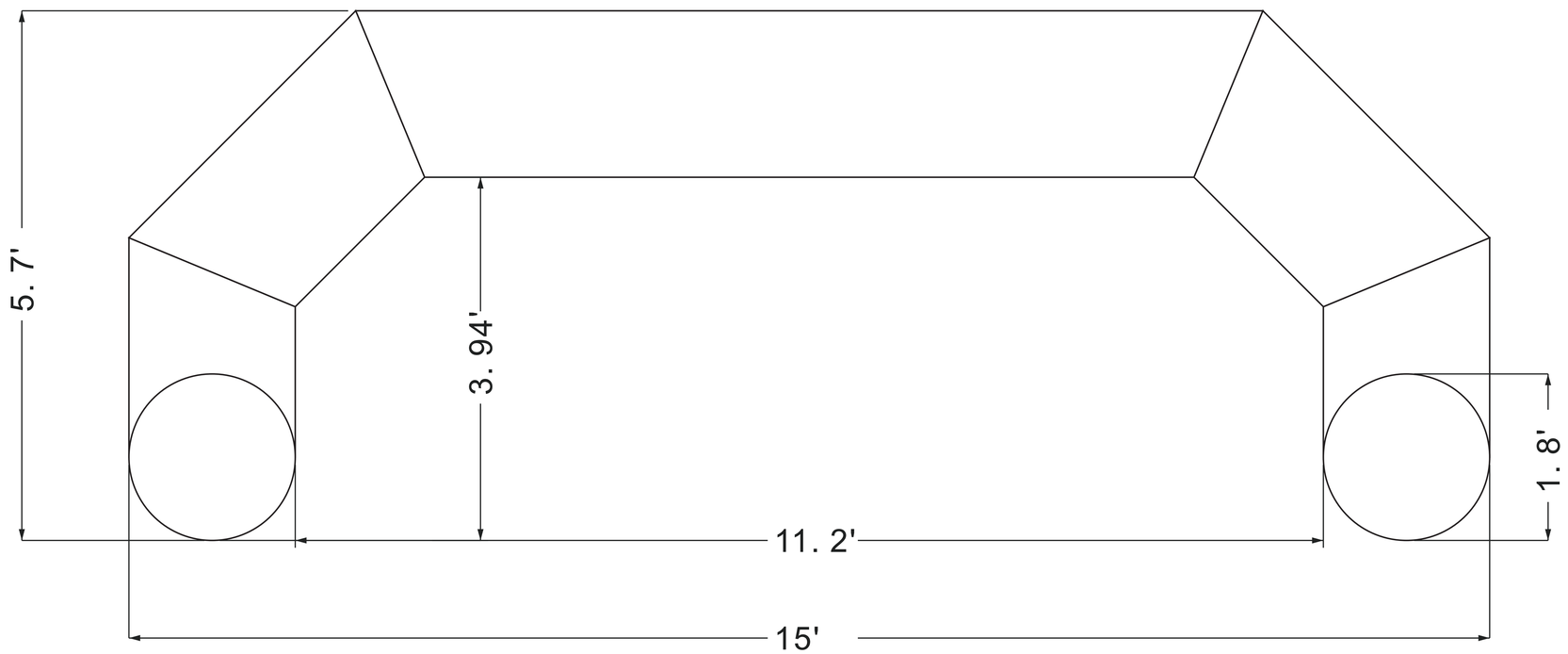

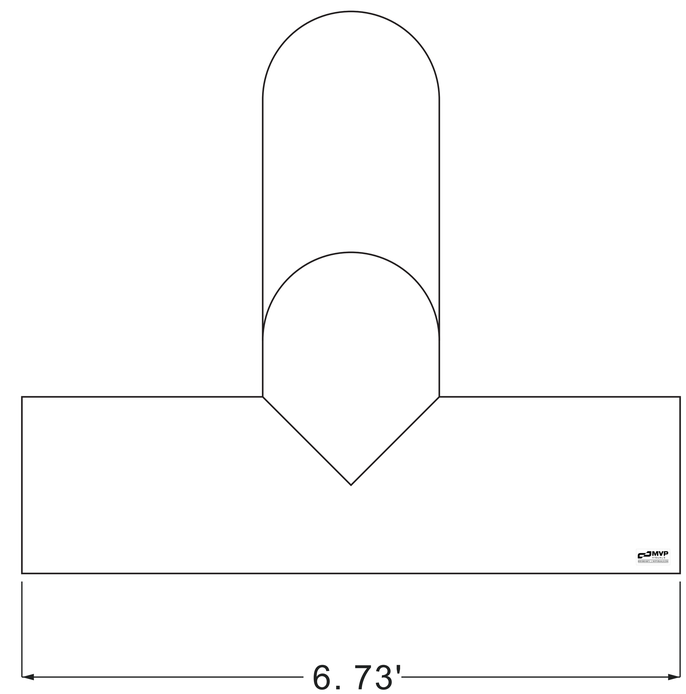

Please note: Your proof and (1) revision are offered at no cost. Edits cannot be made once the proof is approved. This product is being printed digitally in 4 color process (CMYK). PMS numbers are used as a reference point; colors will be matched as close as the 4 color process can achieve. As a result, the finished product may not look like the colors displayed on your computer monitor.
Please reference a PMS book or a physical swatch of the fabric if an exact color is critical. MVP Visuals cannot accept returns for color discrepancies if PMS numbers are not labeled.

CUSTOM ADD-ONS

Feather Flags

Inflatable Buoys

Custom Tents

Spandex Table Covers

Roll Up Banners

mvpvisuals.com | 800-980-6871 | hello@mvpvisuals.com